Premium LED Flex Neon Light

NEON/P2614-T

Featuring advanced tri-color silicone co-extrusion and full silicone encapsulation technologies, the P2614-T is engineered to deliver superior optical performance and reliable long-term outdoor operation. With an IP67 protection rating, it offers excellent resistance to water, dust, UV exposure, and yellowing, making it an ideal solution for architectural façades, contour lighting, landscape lighting, and premium outdoor decorative applications.





Tri-Color Silicone Co-Extrusion Technology

Tri-Color Silicone Co-Extrusion Technology delivers higher luminous efficiency and consistent light output.

IP67

Full silicone encapsulation technology, LED&PCB fully sealed, no any water immersion risk.

Dotless

Uniform light emission, no dark areas.

BENDING DIAGRAM

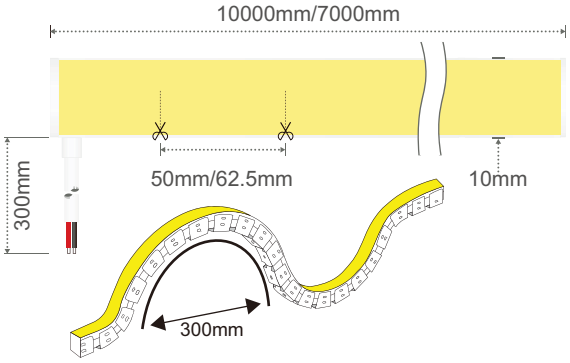

VARIOUS CABLE ENTRY



Side Out(Default)

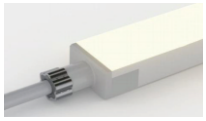

Direct Out



Bottom Out



End cap

PRODUCT PARAMETERS

NEON/P2614-T	Single	TW	RGB	RGBW	DMX
	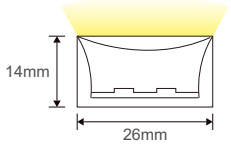				
Input	DC24V				
LED type	SMD				
CRI	>80				
IP rating	IP67				
LED/M	280pcs/M	280pcs/M	240pcs/M	240pcs/M	224pcs/M | 16pixel/M
M/Reel	10M/Reel	10M/Reel	10M/Reel	7M/Reel	7M/Reel
Power	18W/M	24W/M	20W/M	24W/M	24W/M
Lumen/M	1430 lm/M@3000K	720+850 lm/M	1150 lm/M	1460 lm/M	1900 lm/M@3000K
Cutting	50mm	50mm	50mm	50mm	62.5mm
BA					
CCT	2700K 3000K 3500K 4000K 5000K 6500K R G B	2200K⇄5700K			



COMPATIBILITY

NEON/P2614-T	ON/OFF	0/1-10V	DALI	DMX

KEY STRUCTURAL FEATURES



A waterproof barrier ring is fitted on the cable 120 mm away from the front connector to prevent water ingress inside the cable.



Anti-dust surface treatment delivers an ultra-smooth touch and excellent dust resistance for the neon light.



Tri-Color Silicone Co-Extrusion Technology delivers higher luminous efficiency and consistent light output.



IP67 Injection-Moulded Connector

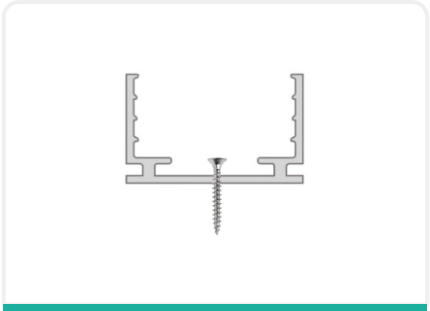

Screw Head Recess Design

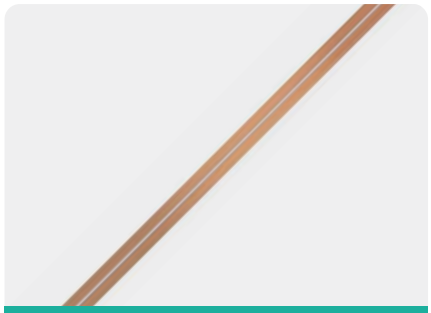

Features calendered copper FPC with a thickness of 4oz

CUTTING AND SEALING

Attention: After cutting and sealing, the waterproof performance will decline.
Follow the end cap sealing steps below; proper operation can achieve a maximum IP66 waterproof rating.

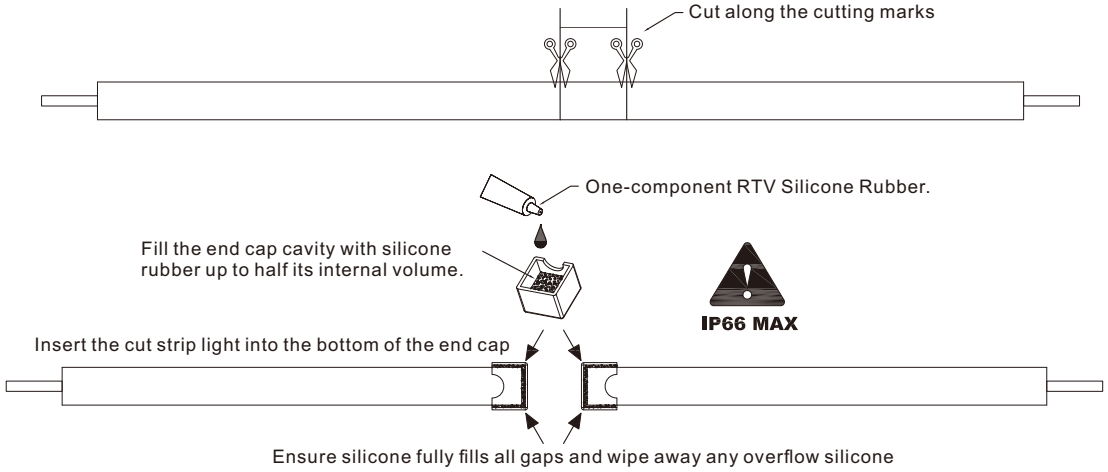

INSTALLATION ACCESSORIES

Category	Model	Description	Picture
NEON/P2614-T	Aluminum Profile	Size:29.2x17.5x2000mm	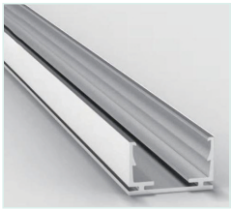
NEON/P2614-T	Aluminum clips	Size:29.2x17.5x50mm	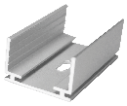
	Input cap	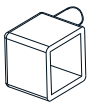 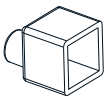 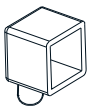	
	End cap	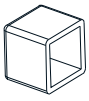	
	Waterproof barrier ring	