IK10 Walkable LED BAR Light

NEON/P1715

It can be installed on outdoor ground, such as pedestrian streets where people walk, car shows where vehicles pass slowly, etc.
Step resistant, No worry for water ingression and crushing.

IK10 | IP68 | Dimmable | 1m | CE | RoHS | 50000h | -20 +55 °C

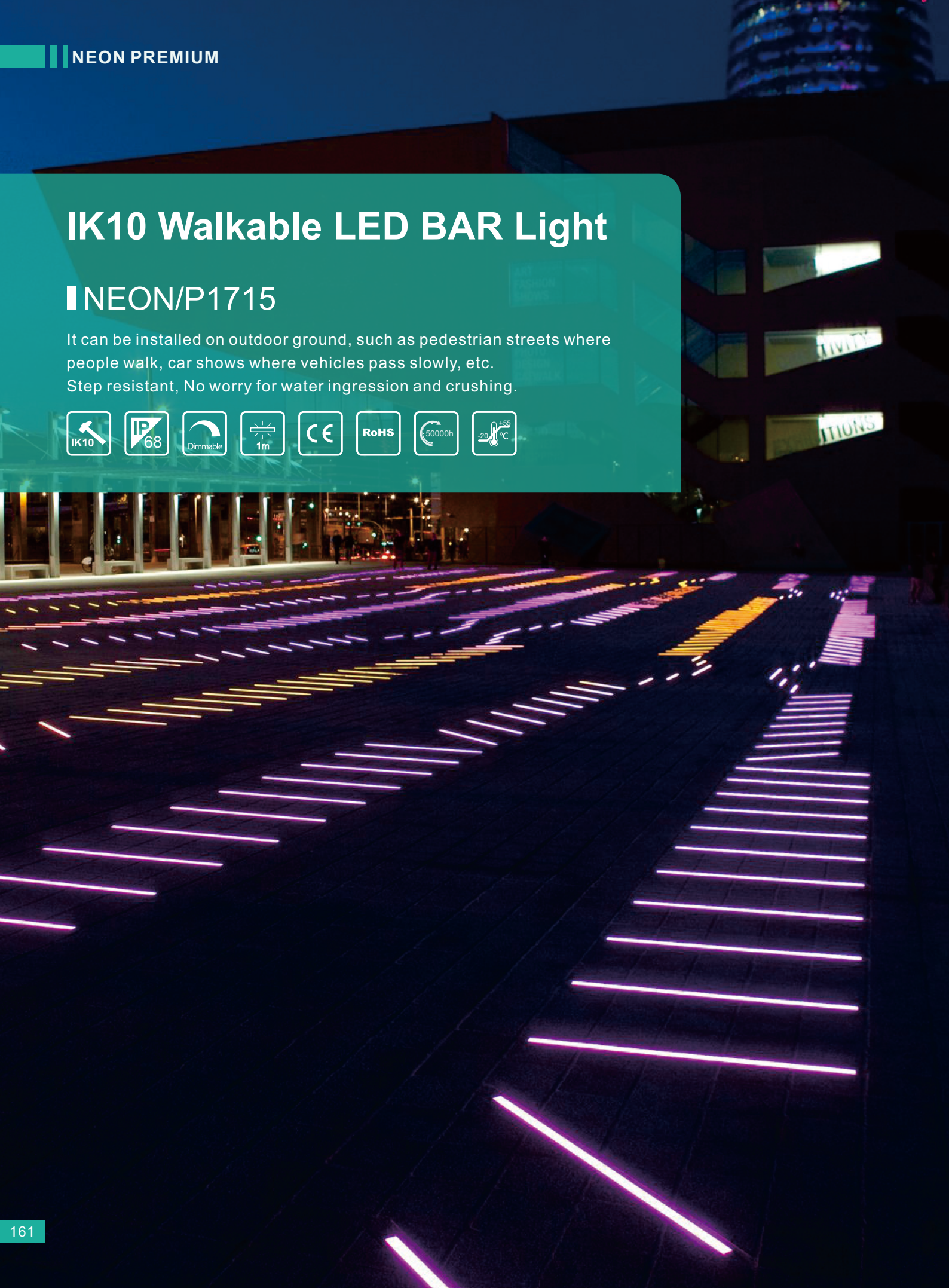



IK10

Robust and step resistant, high impact protection rating IK10 effectively reducing maintenance costs and workload.

PU

Hard PU diffusor, especially for outdoor use, UV resistant and solvents resistant, no yellowing and no crack.

IP68

360°PU encapsulation technology, LED&PCB fully sealed, no any water immersion risk.

Seamless connection

Dot free and uniform emitting surface, end to end connection without any darkness.

DIMENSIONS

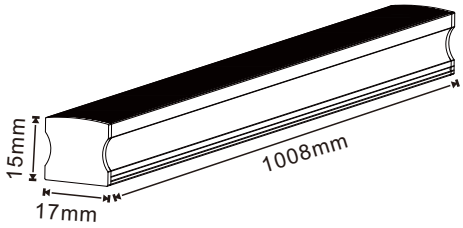

PRODUCT PARAMETERS

Model	NEON/P1715
	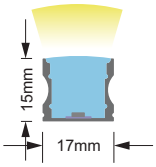
Input	DC24V
LED/M	120pcs/M
M/Length	1M/pc
LED type	SMD
CRI	>90
IP rating	IP68
Power	10W/M
Lumen/M	500 lm/M@3000K
Pixel/m	10Pixel/m(DMX)
BA	
CCT	2700K 3000K 3500K 4000K 5000K 6000K R G B Y 

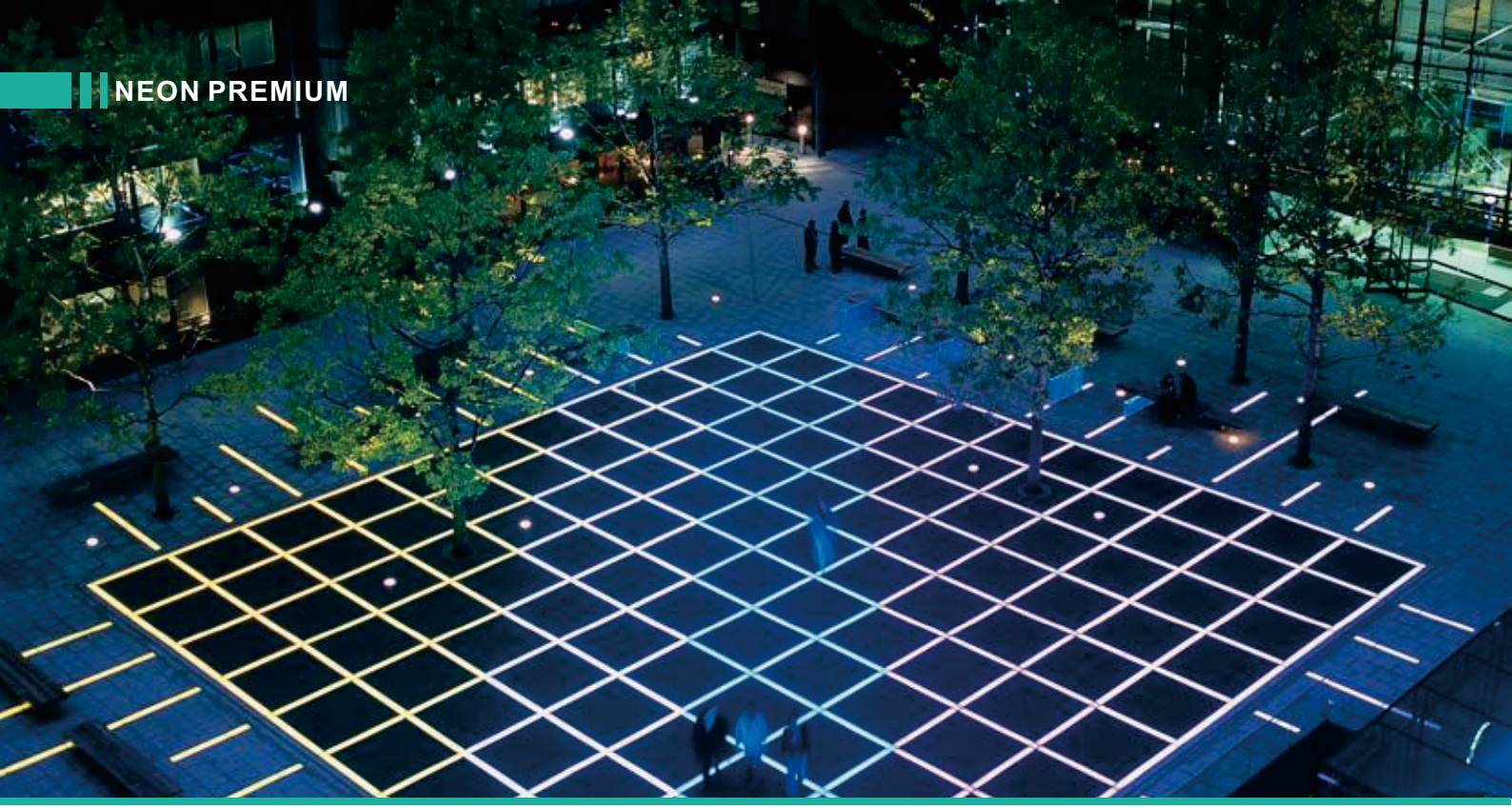

COMPATIBILITY

ON/OFF | 0/1-10V | DALI | DMX512 Full color | DMX512 Pixel color

INSTALLATION DIAGRAM

2 clips per meter for positioning and fixing during installation.

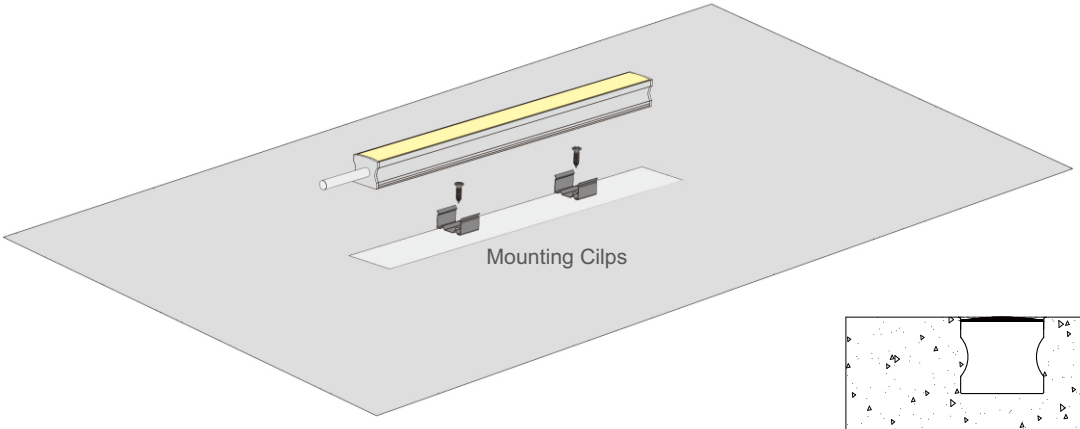

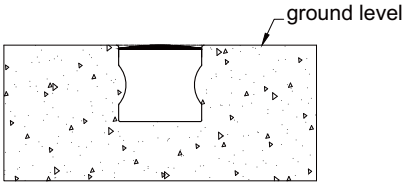

The LED linear must be installed flush with ground level

